TECHNICAL REVIEW

No.14 / October 2020

Technical Review

MAPNA TURBINE ENGINEERING & MANUFACTURING CO. (TUGA)

MAPNA GROUP

MAPNA TURBINE ENGINEERING AND MANUFACTURING COMPANY

Willpower to Empower Generations

Cover Page:
First MGT-40 Power Generation Unit

Editorial

Dear Colleagues, Partners and Professionals,

As a trusted partner willing to empower and provide our valued customers with tailored solutions and services to meet their project-specific needs, at MAPNA Turbine we spare no effort to make sure that we have the best of breakthrough engineering, improvement schemes and technological advancements on offer for them. It is with great pleasure and immense honor that a brief account of a few recent achievements is presented to you, our valued readers, in this edition of MAPNA Turbine Technical Review.

The first article is a superb success story of commissioning, operation and performance test of the first commercial MAPNA Group's MGT-40 power generating unit. MGT-40 is a perfect fit for highly critical applications and demanding conditions. Results of the commissioning and performance tests and monitoring conducted at its installation site are provided in the article.

The second article takes an in-depth look into the aims and scope of the most recent, all-inclusive design and performance improvement and upgrading scheme diligently planned and pursued at MAPNA Turbine to turn the already modified MGT-30(1) gas turbine to a more powerful, efficient, and reliable workhorse. The upgraded MGT-30(2) gas turbine will also boast additional number of benefits including extended time between overhauls, enhanced environmental compliance due to the integration of the advanced dry low emissions (DLE) combustion technology as well as far better derating performance.

The third article introduces the new version of a mobile power plant designed and developed by MAPNA Group and reflects on its key features, distinct design attributes and potential applications. Fast-track power solutions and mobile power plants are on the rise worldwide, and due to a number of benefits including outstandingly high power density, speed and ease of transport, installation and (re)deployment as well as minimized budget, the product would expect a good market.

Finally, the fourth article features an extensive testing and evaluation study conducted by MAPNA Turbine to better understand the underlying mechanisms and dynamics of surface and structural damages encountered by two highly critical hot gas path components of MGT-70 gas turbines, i.e., mixing chamber and hot gas inner casing. Detailed micro-structural analyses and mechanical tests results are provided for both new and ex-service samples prior to and after going through an innovative rejuvenation heat treatment process developed in the course of this research project. The new methodologies developed for life assessment and extension of these critical parts are also delineated.

Please join us in relishing the detailed account of these subjects, in this issue of the Technical Review.

Respectfully,

Mohammad Owliya, PhD

Deputy General Director

MAPNA Turbine Company (TUGA)

October 2020

Table of Contents

1

The First MGT-40 Gas Turbine Power Generation Unit Comes Online; Swiftly & Reliably

Introduction

MGT-40 gas turbine is designed to offer high performance, reliability and availability in critical applications and demanding conditions such as in refinery complexes, petrochemical plants, unsustainable power networks and remote areas out of power transmission lines' reach. Strong startup and shutdown capability as well as reduced startup time make it a perfect fit for peak shaving applications. MGT-40 gas turbine is designed and manufactured to perform at the same level as the most renowned gas turbines in its class. It boasts a skid-based, space-conscious design allowing for placement of the gas turbine engine and over 80 percent of its required auxiliary equipment on a single base frame containing almost 8000 liters of the lubrication oil required for its proper and smooth operation. Its compact design facilitates transportation and swift installation and deployment of the machine and its auxiliary equipment for power generation or mechanical drive applications while reducing a great deal of required space, installation and commissioning time and cost.

Product Overview

MGT-40 gas turbine is a single-shaft engine which is connected to a generator via a speed reducing gear for power generation applications. MGT-40 gas turbine is equipped with a starting motor connected to the turbine shaft via a torque converter and an auxiliary gear for cranking associated auxiliary equipment including shaft-driven pumps. The machine boasts a 17-stage, axial-flow compressor, a combustion system comprising 10 can-annular chambers capable of burning various gas and liquid fuels and a 3-stage high performance turbine with air-cooled buckets and nozzles on the first two stages allowing for higher turbine inlet temperatures.

The gas turbine package is installed within an acoustic enclosure to mitigate operational noise emissions while ensuring adequate ventilation provided for flawless performance of the engine.

The main characteristics are summarized as follows:

- Wide range of applications (from simple-cycle operation to cogeneration, and combined-cycle to mechanical drive)
- High reliability and availability
- Quick installation
- Low cost maintenance
- Flange-to-flange engine changeout capability
- Built for extreme conditions (capable of handling multiple startups, operating in island mode, and featuring black start capability for volatile grid environments)
- Inlet guide vanes for enhanced operational flexibility
- Dual fuel nozzles

Design & Manufacture

The manufacturing process of the MGT-40 gas turbine was initiated once verification of the thermo-fluid characteristics of the MGT-40 GTE and accuracy of all its designed parts and components were thoroughly reassessed and verified.

A number of model sketches and analyses performed on different parts and sections of the MGT-40 gas turbine engine are presented in Fig. 1.

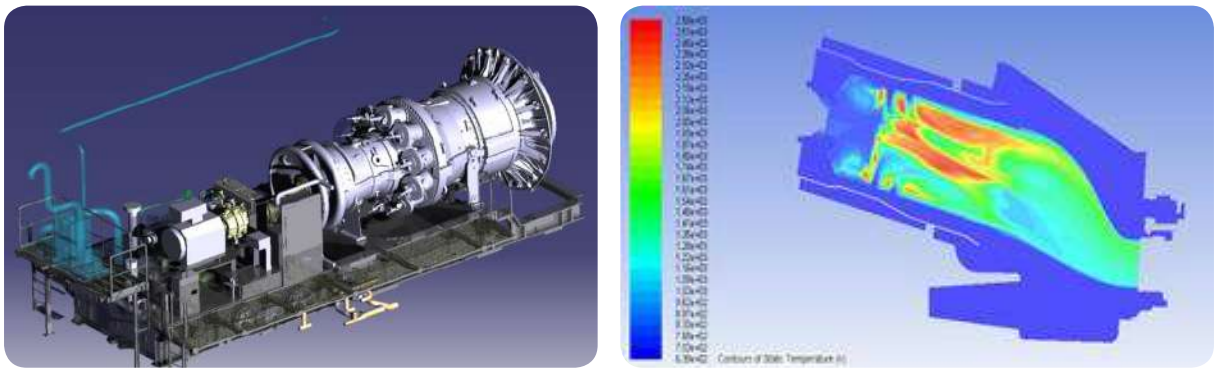

Fig. 1 – Model sketches representing different studies and analyses performed on different components of the MGT-40 gas turbine

Design and selection of the ancillary equipment was also performed based on the functional requirements and process flow diagrams for each equipment.

The control logic of the MGT-40 gas turbine was also designed, developed and implemented, within the MAPNA Group.

Installation & Commissioning

Upon completion of the assembly and packaging of the turbo-generator set with the required on-skid electrical and piping routes and components, the first MGT-40 gas turbine package constituting a single skid of around 100 tons was transferred to be installed at Zahedan Power Plant, southeast of Iran. Other required systems and equipment including generator, gearbox, lubrication oil air coolers, air intake and exhaust systems and related structures were also transferred to the site and installed.

Fig. 2 – MGT-40 gas turbine and its auxiliaries of Zahedan Power Plant

The commissioning and startup of the MGT-40 turbo-generator set began once the interconnecting fuel, lube oil and cooling water pipelines in addition to all required electrical and control connections were implemented and all pre-commissioning steps and function tests - in compliance with the implemented logic control were successfully concluded.

Function tests of all sorts, cold cranking, firing and Full Speed No Load (FSNL), network synchronization and loading operations are among typical commissioning procedures of a turbo-generator set. But, since it was the first time that the MGT-40 turbo-generator set was starting up and being commissioned, the procedure was issued and followed in a meticulous, step by step fashion with a number of tests and inspections performed at each step to ensure the proper operation prior to proceeding to the next level.

List of tests performed during the commissioning is presented in Table 1, below.

Table 1 – Performed tests

Phase	Item	Test Description
1	1	Starting of the GT at FSNL
	2	Synchronization
	3	Loading
	4	Shutting down
	5	Cooling down
2	6	Load rejection at minimum load
	7	IGV TEMP CNTRL - FSRT CNTL ADJ
	8	Unloading
	9	Base load mode selected
	10	Load rejection @ 50%
	11	Load rejection @ 100%

Upon completion of all pre-commissioning/commissioning operations, the MGT-40 turbo-generator set was successfully synchronized with the Iranian national power grid at almost 3-4 MW of power, for the first time.

At almost two hours of operation at 4 MW power output, the critical parameters of the turbo-generator set were closely screened and kept track of prior to the successful implementation of load rejection test, re-synchronization up to 4 MW of power and subsequently shutting down and cooling down of the set in close compliance with the procedures constituting an integral part of the control logic system. Meticulous borescopic inspection of the MGT-40 gas turbine generator set was then carried out to make sure of the intactness of all parts and components.

Temperature distribution at the exhaust of the gas turbine is measured using 18 thermocouples installed circumferentially at the exhaust volute of the MGT-40 gas turbine engine as schematically shown in Fig. 3. Measured temperature spreads were as follows:

TTXSP1: 9 °C

TTXSP2: 7 °C

TTXSP3: 6°C

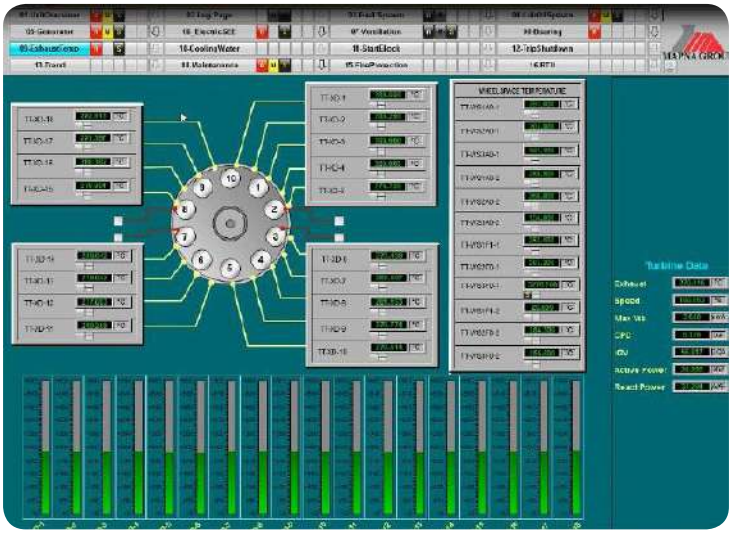

Fig. 3 – A snapshot of the monitoring and control screens at the central control station of Zahedan power plant representing temperature distribution at the exhaust of the gas turbine

Trends of several important parameters during the tests carried out are also presented in Fig. 4. The most important parameters measured are listed in Table 2.

Table 2 – Parameters of the MGT-40 gas turbine engine

Item	Parameter (Unit)	Designation	Value
1	Rotational Velocity (RPM)	TNH	5159
2	Exhaust Temperature (°C)	TTXM	290
3	Fuel Valve Position (%)	FSR	19.45
4	GCV & SRV Pressure Difference (bar)	P2	17
5	Compressor Pressure Outlet (bar)	CPD	5.25
6	Absolute Maximum Bearing Vibration (mm/s)	BBMAX	2.384
7	IGV Position (°)	CSGV	56

Fig. 4 – A snapshot of the monitoring and control screens at the central control station of Zahedan power plant representing trends of several important parameters during the gas turbine test runs

Upon completion of some final logical modifications and required fine tuning and observing all required protection measures, the MGT-40 gas turbine generator set was successfully synchronized with the Iranian national power grid at full nominal load of around 35.5 MW at site ambient temperature of almost 29 °C.

Fig. 5 represents main operational turbo-generator set parameters at base load while its operation was deemed normal from the vibrational, bearing temperatures and lubrication oil pressure points of view.

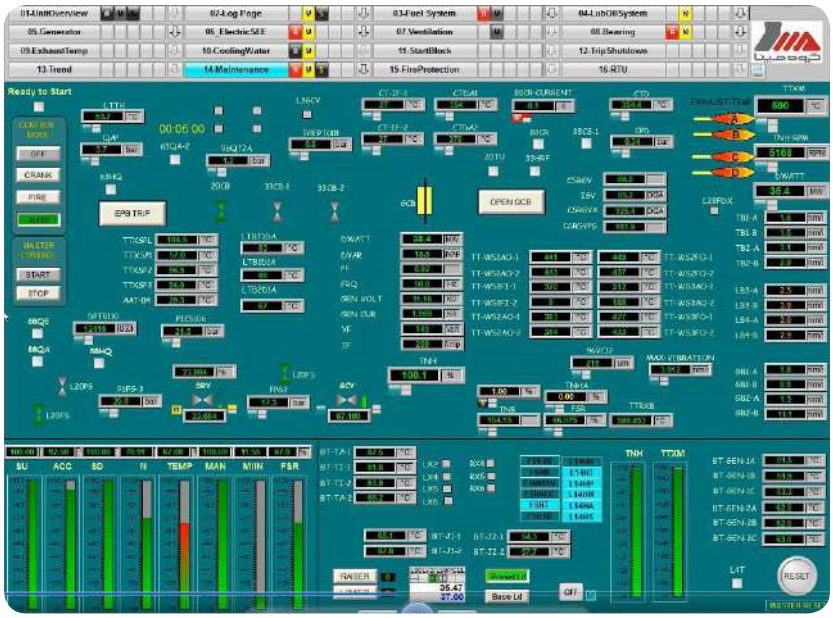

Fig. 5 – A snapshot of the MGT-40 HMI control panel representing main operating parameters at base load operating condition

Other Tests

■ Load Rejection Test

It was necessary to perform load rejection tests in a real-world grid-powering arrangement prior to the start of the trial run period, to ensure complete controllability of the turbo-generator set and stability of the MGT-40 gas turbine's rotational speed with the minimum amount of overshoot and within the shortest amount of time possible. To do so, and following completion of some last evaluations and modifications on the logic control system of the turbo-generator set and HMI panels, a comprehensive test plan comprising offline and online load rejection tests was conducted at three different nominal load ratios of 25% (8 MW), 50% (16 MW) and 100% (32 MW).

The performance of the machine was acceptable with the maximum observed overshoot values of around %0.07 and %4.6 at quarter and full load test conditions, respectively.

■ Over-speed Test

Development of the MGT-40 gas turbine over-speed logic control was carried out and concluded on site based on detailed evaluation of the process conditions and previous experiences. Subsequent to integration of the over-speed logic control into the governor logic core of the MGT-40 gas turbine generator set and following some offline/simulated tests and modifications, the MGT-40 gas turbine was tested at the over-speed mode with % 105 rotational speed and successfully went out of service.

■ Performance Test

Performance tests are of critical importance to make sure of the overall operability of a gas turbine and it was time to put the MGT-40 gas turbine into a real-world grid-powering arrangement performance test for the first time to verify its adequacy and demonstrate the formidable performance it was designed to deliver. All required tests were carried out at Zahedan Power Plant. According to the test results, the MGT-40 gas turbine garnered satisfactory and even better than expected test results as presented in Table 3, and proved it is well up to the job.

Table 3 – MGT-40 performance test results

Parameter	Design Value*	Measured (Corrected) Value
Nominal Power @ Generator Terminal [kW]	41600	42010
Efficiency @ Generator Terminal [%]	31.8	32.3
Heat Rate @ Generator Terminal [kJ/kWh]	11320	11152
Turbine Inlet Temperature [°C]	1085±10	1089

* ISO rated

Performance Monitoring

Achieving highest possible reliability and availability levels with power plant units while keeping maintenance costs at lowest possible amounts are of the prime goals of equipment operation management systems. This would be realized only through successful implementation of physical asset management schemes integrated into condition monitoring systems.

These systems manage the operation of all physical assets, no matter large or small, so as operators and authorities are informed of their assets' conditions instantly which allows for informed necessary decisions to be taken in advance.

It would yield to the reduction of outages as well as procurement, manufacturing and commissioning times which translates into increased incomes. Furthermore, due to optimum maintenance of the equipment and constant monitoring of the assets during their life cycle, repair and maintenance costs would also decrease, leading to reduced unprecedented incidents, equipment breakdown and adverse environmental impacts.

In this context and as a pilot critical assets management project, condition monitoring of the first MGT-40 gas turbine installed at Zahedan Power Plant and its ancillary systems and equipment has been planned and pursued by MAPNA Group. This project is consisted of condition monitoring software systems procurement, installation and commissioning as well as providing engineering and technical supports and services of different types.

It is to be noted that, MAPNA Group have been actively involved in the field of condition monitoring services since 2014 and in addition to offering monitoring services for all their product portfolio fleet including gas and steam turbines and their related ancillary systems and equipment, have provided local and remote online condition monitoring services based on MAPNA MIND platform which are taken advantage of in several MGT-70 gas turbine power plants and wind turbine gearboxes.

Condition monitoring services offered for the first MGT-40 gas turbine installed at Zahedan Power Plant is consisted of the implementation of required condition monitoring systems as well as providing technical supports and reports of different types.

2

MGT-30(2) Gas Turbine; an Upgrade Scheme Meant to Make a Huge Difference

Introduction

Three-spool MGT-30 gas turbine has become increasingly popular in Iran covering a variety of power generation, combined heat and power (CHP) and mechanical drive applications including mobile, portable and stationary power plants of all sorts, desalination plants and natural gas compression stations.

The MGT-30 gas turbine engine (GTE) consists of two main sections, i.e., Gas Generator (GG) and Power Turbine (PT) which are thermodynamically coupled to each other. This special design arrangement, i.e., twin spool gas generator allows the MGT-30 GTE to provide customers with outstanding reliability matched for most critical applications through prevention of surge and stall phenomena within the gas turbine.

Improving performance parameters and reliability of MGT-30 gas turbine had long been targeted at MAPNA Turbine through monitoring the units, studying root causes of reliability issues and defining and implementing improvement plans which led to a modified version of the product known as MGT-30(1), commercialized in 2019 as elaborated on in the preceding issue of MAPNA Turbine Technical Review.

Similarly, as a new product and in line with the marketing strategies in place, upgrading the recently modified version of the MGT-30 gas turbine engine, i.e., MGT-30(1) to a more developed machine; MGT-30(2) was also on the radar. This version aims at further increase in the time between overhauls, and improvement of performance characteristics of the MGT-30 gas turbine engine whilst decreasing its environmental footprint and pollution emissions via implementation of some modifications during the overhaul intervals of the machine. Doing so, the highest possible performance improvements in terms of efficiency and power output will be achieved in MGT-30 gas turbine engines with minimum changes in the main components and hence minimum costs associated with the upgrade during an overhaul.

A chronicle of performance improvements and upgrading schemes applied on the MGT-30 gas turbine platform since its first introduction in 2010 is presented in Table 1.

Table 1 – chronicle of upgrading schemes applied on the MGT-30 gas turbine platform

Product	Year	Power Output (MW)	Efficiency (%)	TBO (EOH)	Major Enhancement(s)
MGT-30	2010	25	36.1	25000	-
MGT-30(1)	2019	25	36.1	25000	Higher Reliability
MGT-30(2)	2021	26	37.1	32000	Better Derating

MGT-30(2) Upgrade Project Aims and Scopes

MAPNA Turbine exceedingly benefits from the massive experience of manufacturing more than 130 MGT-30 gas turbine units so far and MGT-30(2) is the result of some advanced improvements and modifications introduced in the design and fabrication of the upgraded machine in comparison with the preceding versions, aiming at acquiring maximum power cost-effectively in addition to lifetime enhancements.

The major modifications include: Redesigned compressor and gas turbine blades and vanes, gas turbine blades cooling paths, Secondary Air System (SAS) for sealing as well as applying Thermal Barrier Coating (TBC) layers on gas turbine and combustion chamber hot sections. The major goals of this upgrading project are as follows:

- Gas turbine performance increased by up to 1% (standard ISO conditions)
- 1 MW increase in power output (standard ISO conditions)
- Increase in time between overhaul (TBO) from 25000 to 32000 (EOH)
- Reduction of environmental pollutants by using DLE (Dry Low Emission) Combustion System
- Gas turbine performance improvement at high ambient temperatures (derating improvement)
- Reduced maintenance costs resulting from extended inspection intervals of 32000 EOH

There are also other benefits associated with the MGT-30(2) gas turbine upgrade project including:

- Suitability for all kinds of climates typically encountered in Iran
- Lower part-load emissions
- Improved reliability and availability
- Advanced coating layers on blades and combustion liners
- Applicability in all existing plants and stations where MGT-30 gas turbines are installed (Wide and strategic fleet with more than 150 units installed in the country)

Main modifications to be implemented on the MGT-30 gas turbine body within the framework of the MGT-30(2) upgrade project are indicated in Fig. 1 (highlighted areas) and listed below:

- Redesigning of all compressor vanes (High and low pressure compressors)
- Redesigning of all low pressure compressor blades
- Redesigning of all turbine blades & vanes (High and low pressure turbines)
- Combustion chamber modifications (DLE liners, burners and all related auxiliary equipment)
- Lifetime extension of all ball bearings

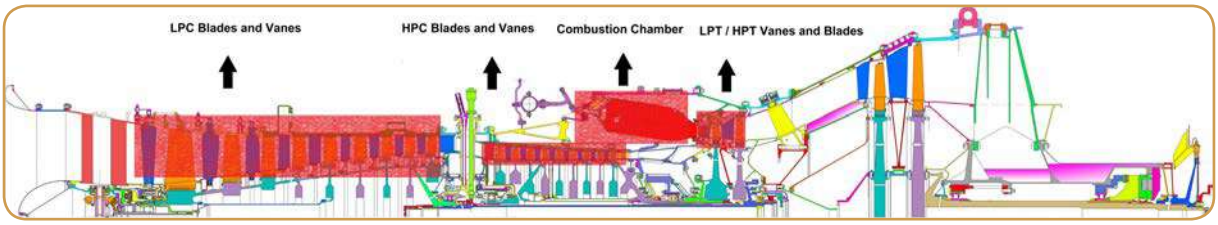

Fig. 1 – Main modifications to be implemented on the MGT-30 gas turbine body within the framework of the MGT-30(2) upgrade project (Highlighted areas in red)

The main specifications of the upgraded MGT-30(2) gas turbine are expected to be as follows, once all modifications are implemented.

Table 2 – Specifications of the upgraded MGT-30(2) gas turbine engine

Item	Parameter (Unit)	Value
1	Power Output* (MW)	26
2	Efficiency* (%)	37.1
3	Turbine Inlet Temperature* (°C)	1240
4	Exhaust Temperature (°C)	478
5	Pressure Ratio (-)	21.5
6	No./ Type of Combustors	16/ Can annular
7	NOx Emission - Natural Gas Fuel (ppm)	25

* ISO rated

MGT-30(2) Areas of Enhancement

■ New Efficient Compressor Design

The upgraded MGT-30(2) gas turbine takes advantage of two 9-stage axial compressors with three variable inlet guide vanes. At design conditions, the high and low pressure compressors rotate at approximately 7500 & 9850 rpm, respectively. Enhancing efficiency of the compressor section of the MGT-30(2) gas turbine involved aerodynamic optimization of all low and high pressure stages of the compressors. This included both rotary and stationary blades (except for high pressure rotary blades) and vanes and resulted in improvements in total efficiency and net output of the machine. The compressor blades can be removed and replaced without needing to dismantle the rotor. The mass flow and main vane platform connections and blade root designs remain unchanged in order to allow for retrofits of the current MGT-30 gas turbine versions. The airfoils of these new blades and vanes are optimized in order to enhance air flow aerodynamics and consequently increase the efficiency of the compressor section in general.

Typical fluid flow analysis performed over the airfoils belonging to the 8th stage stator of the Low Pressure Compressor (LPC) of the MGT-30(2) gas turbine prior and after implementation of planned, dedicated optimization measures are represented in Fig. 2.

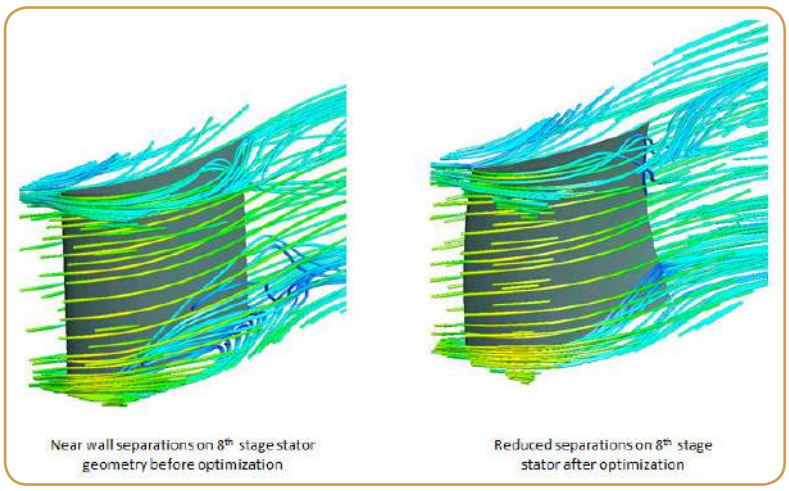

Fig. 2 – Air flow streamlines representing near wall separation phenomenon over the 8th stage vane of the MGT-30(2) gas turbine LPC prior (Left) and after (Right) implementation of optimization measures

Another area of improvement at the compressor section is extension of the 8th stage blades lifetime up to 100,000 EOH.

Additionally, the design of compressor parts and components has been modified so as to allow MGT-30(2) gas turbine to reach higher power output and efficiency values in real ambient conditions. So, it is predicted that the derating status of the MGT-30(2) gas turbine will be significantly better than the base version of the gas turbines. An estimation of the derating performance of the machine in comparison with the initial versions of the fleet is presented in Fig. 3.

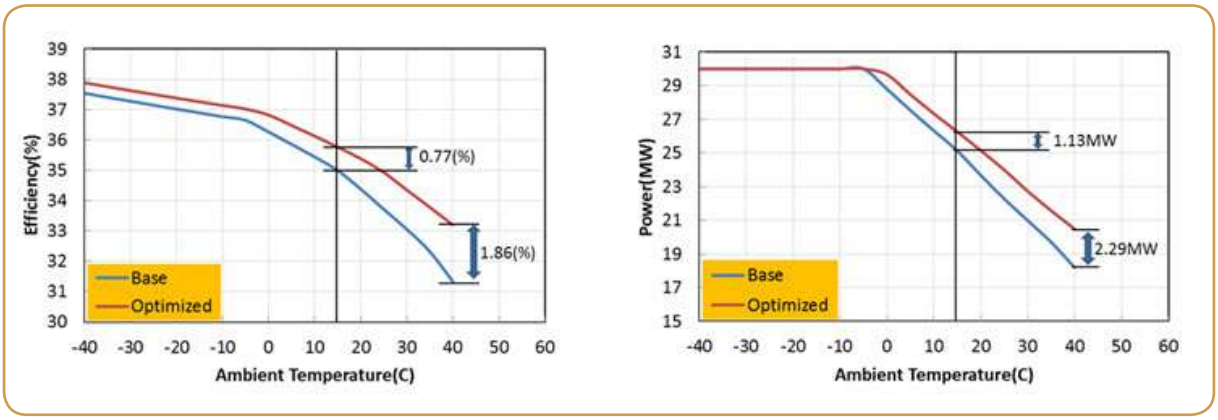

Fig. 3 – MGT-30(2) gas turbine derating performance in comparison with initial versions of the machine

■ New Turbine Section

As is the case with initial versions of the MGT-30 gas turbine, the turbine section of the MGT-30(2) comprises three thermodynamically coupled sections including one-stage High and Low Pressure Turbines (HPT and LPT) which drive high and low pressure compressors respectively, in addition to a four-stage Power Turbine (PT) in case of power generation and/or a two-stage PT for mechanical drive applications.

HPT & LPT nozzle vanes (NV) and working blades (WB) of the MGT-30(2) gas turbine are provided with cooling to ensure the admissible temperatures of the materials used are not exceeded. The MGT-30(2) upgrade plan includes aerodynamic performance improvements and improved cooling schemes for HPT and LPT blades and vanes. The aerodynamic performance improvement leads to overall enhancement of the HPT and LPT efficiencies.

The main gas path contours, vane platform connections and blade root designs remain unchanged in order to allow retrofits for the current MGT-30 gas turbine versions.

An increase of the T_{ISO} is considered within the upgraded MGT-30(2) design. The cooling design configurations of the HPT and LPT vanes and blades are improved in order to withstand increased temperature caused by thermodynamic redistribution of the turbine load as well as the increased TIT. The thermal load of the vanes and blades are in a similar condition as with the reference machine. Cooling air extractions from the gas turbine compressor safeguard turbine blades and vanes against the hot gas with high efficiency convective cooling schemes designed, together with advanced oxidation and thermal protective coatings applied.

Typical airfoil profile sections developed for the MGT-30(2) HP & LP turbines are shown in Fig. 4.

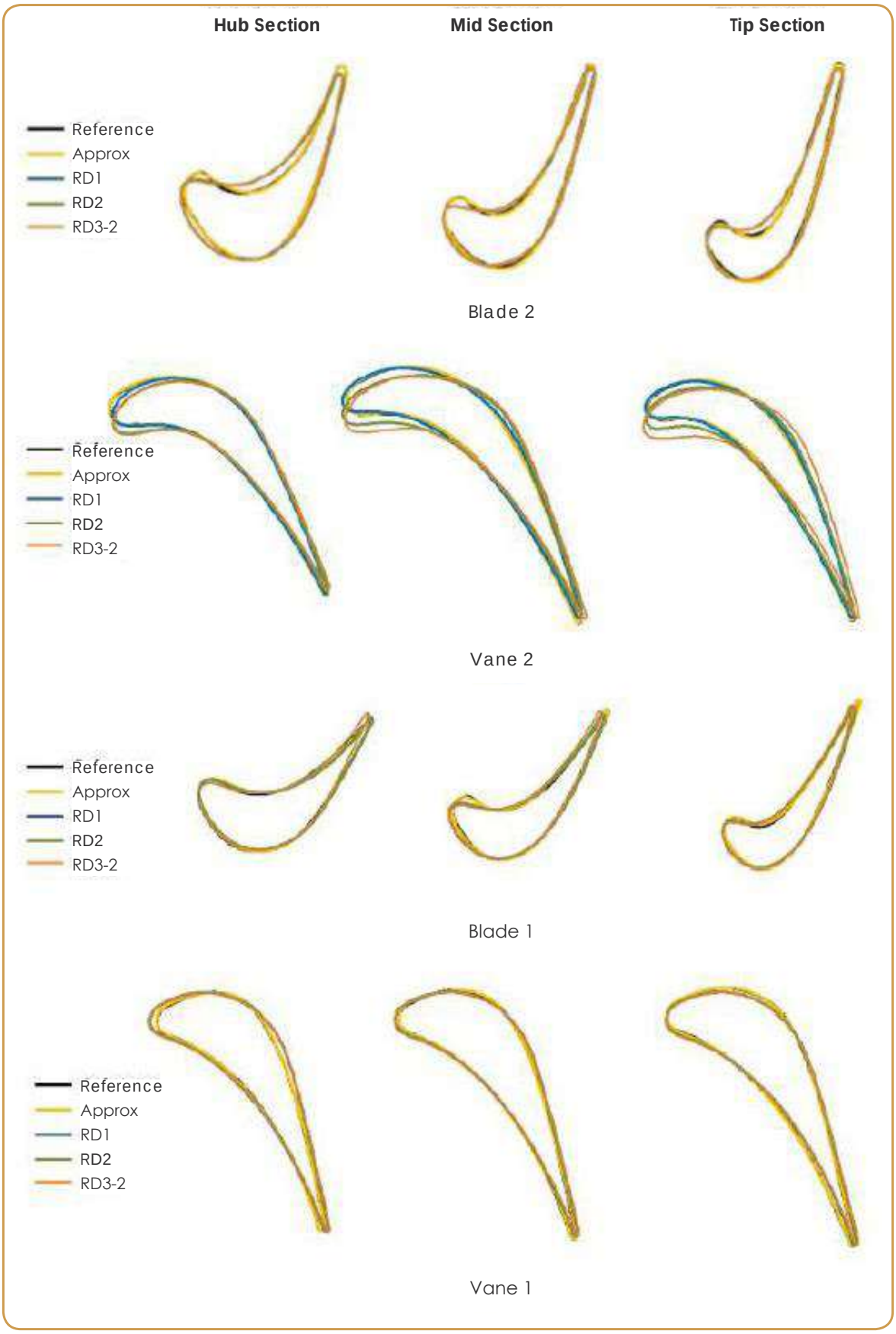

Fig. 4 – Typical airfoil profile sections developed for the MGT-30(2) HP & LP turbines

A schematic representation of the advanced multistage convective cooling scheme designed for the MGT-30(2) HP & LP turbines indicating cooling air flow paths and velocity contours is depicted in Fig. 5.

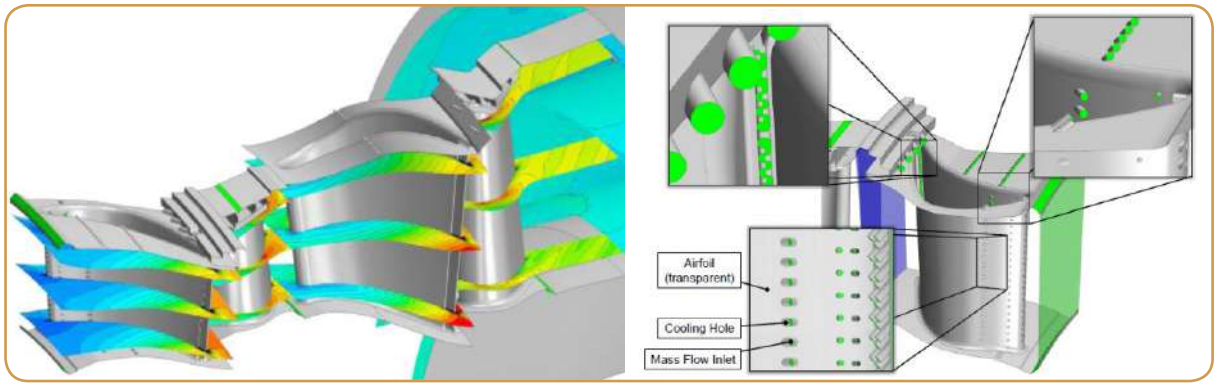

Fig. 5 – Schematic representation of the advanced multistage convective cooling scheme designed for the MGT-30(2) HP & LP turbines including cooling air flow paths and velocity contours

■ Low NOx Combustors

MGT-30 gas turbine is primarily designed based on diffusion mode combustion with NOx emission values of around 200 ppm at base load. Emission reduction schemes to meet ever-increasing demands for cleaner power generation initiatives are technically viable through using DLE combustion systems or more traditional approaches such as steam or water injection.

To be in compliance with increasingly demanding environmental standards, design and development of a DLE combustion system was stipulated in the upgrading roadmap of the MGT-30(2) gas turbine engine.

Unlike conventional diffusion combustors, DLE combustion systems are developed in such a way that the combustion zone temperature, as the main factor affecting emission levels, would be controlled by providing lean air/fuel mixture. So, the fuel and air are needed to be premixed at a specific ratio prior to entering the combustion zone. The MGT-30(2) NOx emission level is 25 ppm upon application of the exclusively designed DLE combustion chambers. A detailed account of DLE combustor design and development for MGT-30 gas turbines was extensively elaborated on in an article presented in a preceding issue of Technical Review, No. 11.

A 3-D model representation of the DLE liner developed for MGT-30 gas turbines is shown in Fig. 6.

Fig. 6 – 3D model illustration of the DLE liner developed for upgraded MGT-30(2) gas turbine

Concluding Remarks

High reliability and availability in combination with higher power output and efficiency values as well as using DLE combustion system makes the MGT-30(2) gas turbine a perfect choice for onshore applications of all sorts.

The new eco-friendly version can be retrofited on the running fleet of the machine, to achive higher output, efficiency, reliability and availability.

3

Doing More with Less with the New Mobile Power Plant

Introduction

Deploying mobile power plants is on the rise to provide stable and reliable electricity power for industrial, petrochemical, refinery and utility plants, and facilitate distributed power generation. Due to their fast and easy transportability, site installation and commissioning, mobile power plants are the best option to maintain supply of power in circumstances such as natural disasters and when unprecedented incidents strike, as well as electrifying remote areas with limited or no access to the power distribution grid.

Already massive capital investment in industrial, petrochemical, refinery and utility plants, on one hand, and ensuring a fast, easy, reliable and flexible power supply for processes taking place in these plants on the other hand, have led key players in the power generation industry to come up with mobile power plant solutions. Construction and installation time and capital expenditure in these areas, are among the major factors to consider when making the decision as to which type of power generation scheme is more viable. Mobile power plants bring about one immediate benefit: A substantial portion of the power plant installation as well as the tests required are carried out in the factory and all detected issues and nonconformances are rectified before it even arrives home. So, many utility companies are turning to mobile power generation scheme to provide uninterrupted services to their customers during the planned/unplanned outages.

With the shift toward more beneficial distributed power generation schemes, many competitors are also working on mobile power plants that help them achieve their marketing goals and staying ahead of the curve. In this context, mobile power plants are used for temporary or peak shaving applications, meeting seasonal demands, and providing the required power when consumption rate increases beyond the capacity of the grid typically fed by stationary power plants.

So far, two versions of mobile or prefabricated

power plants have been developed and produced by MAPNA Group known as MGT-30mobile (based on six-trailer mounted platform) and MGT-30prefab (based on four-chassis mounted platform). The most recent version of these products is a newly designed, under construction mobile power plant packaged on fewer number of trailers. Like previous versions and depending on the ambient conditions, this brand new design is capable of producing up to 25 MW of mobile, scalable power. It can run on, gas and liquid fuels and is quick enough to dispatch and reach its full power in a short timeframe. Compared with previous versions, higher power density of this mobile power plant enables fast power provision for a wide range of applications on a temporary or permanent basis. This trailer-mounted power plant boasts a space-conscious design with much reduced footprint.

Product Description

The new mobile power plant features trailer-mounted modules which can be rapidly deployed by air, land or sea and are pre-commissioned in factory. A 3-D model representation of the new mobile power plant assembly is shown in Fig. 1. The systems located on trailers are self-contained so as to minimize the number of interconnections required on site.

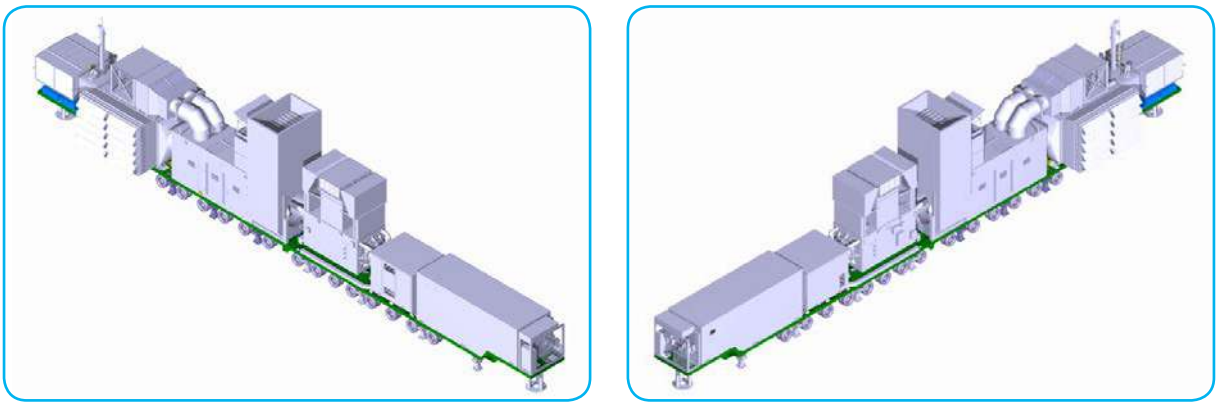

Fig. 1 – Final assembly of the new mobile power plant on site

Every aspect of this design is conceived to speed up and simplify installation on site. All the essential gas turbine auxiliary systems are trailer mounted in factory, which reduces the necessary balance of plant (BOP) equipment to a bare minimum. In addition, mobile power plant units are pre-commissioned and fully tested in factory, minimizing the scope of commissioning on site. The trailer-mounted unit is driven to the installation site, requiring minimal civil preparations.

This version is designed to allow the fastest commercial operation of the power house of the facility they are erected in. With most systems factory-installed and factory-commissioned, and the BOP equipment scope substantially reduced, the budget and schedule overrun risks are minimized. This mobile power plant is also easy to transport. This facilitates speedy delivery to the installation site as well as redeployment if needed. Moreover, site interfaces and preparation works are minimal; this new mobile design is a self-contained plug-and-play generator set that can be installed without extensive civil works.

The number of plant connections and BOP services, such as electrical output, gas and/or liquid fuel, are greatly reduced. Outstanding power density is a distinguishing feature of this new design. Thanks to high power output of the gas turbine and the compact package design, it can attain high power output on a minimal site area, which translates into significant cost savings.

Applications

The latest version of mobile power plant is designed to address a number of challenges in supplying electrical energy including but not limited to the following:

Difficult access to the electric grid: Shortage or lack of transmission and distribution infrastructures available at remote and isolated areas

Lengthy construction of electricity generation infrastructure: Long construction time as well as unpredicted delays

Emergencies and natural disasters: When power generation sources and infrastructure are destroyed or severely damaged

Rapid demand growth: Growth of electricity demand rates during seasonal or peak periods

Key Features

The main features of this novel mobile power plant include, but are not limited to the following:

High power density: space-conscious design allowing for locating the trailers and equipment in smaller pieces of land and more efficient use of available resources

Quick installation and commissioning: Power can be generated in a short time following site preparation and arrival of the trailers

Mobility: Mounted on a mobile platform, this power plant can be transported via land, air and sea to remote places. The mobile nature of the power plant means that it can be swiftly deployed to other sites within days when it is no longer required at the original site

Distributed power: localized power supply, eliminating the need for additional transmission and generation infrastructures

Modular reliable Power: Capable of providing 25 MW blocks of power as demand increases

Dual fuel capability: Capable of running on both natural gas and/or fuel oil

Technical Specifications

The general specifications of the new mobile power plant are as listed in Table 1.

Table 1 – Technical characteristic of the mobile power plant

Item	Parameter (Unit)	Fuel Gas	Fuel Oil
1	Output* (MW)	26	24.8
2	Efficiency* (%)	36	35.4
3	Power Turbine Output Shaft Speed (RPM)	3000	
4	Heat Rate (kJ/kWh)	10000	10169
5	Exhaust Mass Flow (kg/sec)	90	89
6	Exhaust Temperature (°C)	478	480
7	Generator Rated Voltage (kV)	11	
8	Generator Frequency (Hz)	50	
9	Noise Level (dB)	90±3	

* ISO rated

Design Features

Trailer structures are not only meant to carry equipment to designated sites but also to serve as a foundation for power plant operation. So, the design of the trailers proved to be one of the main challenges associated with this project, given the variety of structural and operational loads applied on these structures as well as transportation requirements.

In comparison with the previous mobile and/ or portable power plant designs, the turbine and the generator are placed on separate trailer platforms rather than sharing a common trailer platform. So, a series of rotor-dynamic and vibrational analyses were carried out on the turbine, the generator and the trailers' assemblies in order to ensure a sound, safe and reliable performance of the set.

To do so, rotor-dynamic analyses were performed to extract the unbalance response and to establish the critical speed map. In the case of vibrational analyses, the trailers and the auxiliaries mounted on them were analyzed and the mode shapes were extrtacted.

Speed and ease of transport are of great concern with mobile power plants and as such, reducing the number of trailers was considered a key feature of the new mobile power plant design. As a matter of fact, using fewer number of trailers to transport the plant's main equipment will help improve transportation conditions and reduce the time and cost of transportation as well. However, due to some road transport restrictions on the allowable height and weight of shipments, some power plant equipment will have to be transported to the designated site separately as loose parts to be installed on-site. These include turbine enclosure and generator ventilation systems as well as some parts of the turbine air intake and exhaust systems.

The trailer platforms were designed to be of standard width to suit the normal traffic arrangement on as many roads and highways possible. However, this feature came about at the expense of some access limitations within the turbine enclosure due to space limitations inside. Thus, a number of access doors were designed and considered at some required points where access to the machine was deemed critical.

Concluding Remarks

In this article, the new version of MAPNA Group mobile power plant was introduced. In recent years, mobile power plants have become a focal center of interest for major OEMs due to their unparalleled, distinctive features.

Thus far, a number of such power plants have been built and deployed around the world by some major OEMs. In the meantime, efforts have been made to increase the applicability and attractiveness of these power plants by reducing the number of trailers, increasing the ability to transport them more quickly, and installing and operating them as quickly and easily as possible.

With the outstanding design features mentioned in this article, the new mobile power plant of MAPNA Group is on its way to be among the most modern products of its kind ever built.

4

A Novel Approach to Residual Life Assessment of MGT-70 Gas Turbine Combustion Components

Introduction

The availability and reliability of MGT-70 gas turbine fleet installed in numerous power plants around the country play a key role in power generation. This is largely achieved by integrity assessment of hot section parts of these machines during their service lifetime, improving the manufacturing (and redesigning) quality as well as reducing the unplanned outages and scope of maintenance tasks required.

Over the years, MAPNA Turbine has carried out several in house studies to better understand the micro-mechanisms of the damages typically encountered by these machine components by analyzing service-run blades, vanes and combustion parts, and providing new data to improve and extend related components' operational lifetime. This knowledge-based engineering assessment (and upgrading) has contributed to improved longevity of hot section parts and extended service life of MGT-70 gas turbines to a great extent.

Condition assessment of large structural parts of gas turbines such as combustion mixing chamber and inner casing during the maintenance intervals, supports the engineering decisions on extending the operational life of these critical components for more service cycles.

Several research studies previously conducted at MAPNA Turbine on service-induced degradation of mixing chambers and inner casings of MGT-70 gas turbines have already resulted in reducing the cracking of these components through implementation of new designs and manufacturing methods developed for the inner casing hub and improving their thermal properties via applying Thermal Barrier Coating (TBC) layers. However, for the purpose of extending lifetime of these components beyond the nominal design life of around 100k EOH, it is necessary to estimate progression of the damage into the base alloy up to the end of the next maintenance cycle. This also includes the state of recovery of the alloy microstructure during rejuvenation heat treatment. This is achieved by estimating the dynamics of microstructural evolution and

surface degradation of the base alloy which is the subject of the present research project. Concurrently, a series of detailed micro-structural analyses and mechanical tests were also performed on the ex-service alloy samples prior to and after going through an innovative rejuvenation heat treatment process developed in the course of this experimental study. These parts were then benchmarked against the newly fabricated IN617 superalloy components. Subsequently, a modified life assessment method for evaluation of inner casing and mixing chamber components was established. A revised protocol for site inspections was also introduced as well as combined destructive and non-destructive testing methods utilized in the ultimate life assessment of these parts.

Wrought IN617 superalloy, with an acceptable combined weldability and formability has long been used for manufacturing both mixing chamber and inner casing components of MGT-70 gas turbines. This alloy structure is largely strengthened not only by solid solution, but also with gamma prime precipitation and carbide (and nitride) formation within the structure. The volume fraction of the gamma prime is relatively low (around 5%) [1], but it provides high strength and ductility during high temperature exposure. The evolution of alloy microstructure has already been examined on thermally exposed samples in the laboratory or on the crept samples [2,3]. However, the extent of IN617 alloy degradation under high pressure and high temperature gradient conditions such as those typically encountered with sheet metals of gas turbines combustion components has not been extensively studied yet. The present article provides some highlights of the study performed towards this goal.

Materials & Methods

A couple of samples taken from mixing chamber and inner casing walls of MGT-70 gas turbines with known operating hours of 33k, 66k and 100k EOH were provided for conducting this experimental investigation. The component with 100k EOH service lifetime had already been rejuvenated once after 66k EOH using a conventional heat treatment cycle.

As part of this research project, all components were initially inspected using non-destructive testing methods. This was followed by destructive sampling of each component to assess the severity of structural changes on degradation of the mechanical properties of the related parts in the course of their operational service life. The specimens were provided by cutting through mixing chamber and inner casing walls at several distinct positions with mixed and random damage severities, as shown in Fig. 1.

The mechanical properties of the samples were assessed using a variety of test pieces from fully machined and polished surfaces to untouched specimens taken directly from the surface of the ex-service components.

Fig. 1 – A photo showing different positions of the samples cut out of the mixing chamber of an MGT-70 gas turbine following 100k EOH and the specimens prepared

Concurrently, a series of innovative rejuvenation heat treatments were applied on the ex-service samples of IN617 alloys and then benchmarked against new IN617 parts in terms of microstructure and mechanical behavior.

The depth of surface degradations, grain distribution and growth, gamma prime coarsening, carbide formation and coarsening (and other unexpected phases) were monitored along with the changes of the mechanical properties, to assess parts' conditions prior and after implementation of the upgraded rejuvenation treatment for operational life extension.

The thermal gradient across the wall of the mixing chamber and inner casing, which had significantly influenced the alloy microstructural degradation, proved to be of critical importance on making the decision to run further, replace or repair each combustion system component. A significant part of this study was focused on microstructural evaluation of the parts across the cold-hot wall cross sections.

Typical Service Degradations

Surface degradation of the IN617 alloy incorporated a series of oxidation and nitridation of the alloy from both gas and air sides of the component. The severity of damage was varied with the local temperature of the component at a given location. For instance, at areas with higher metal temperatures some large amounts of bulky chromium carbides (M23C6 type) were formed along the alloy grain boundaries. This was transformed to carbonitride of chromium nearer to the surface of the alloy. However, the areas with lower metal temperatures (typically below 800°C) were much less susceptible to nitridation. Scanning Electron Microscopy (SEM) images presented in Fig. 2, as well as the Energy Dispersive Spectroscopy (EDS) analysis results provided in Fig. 3 show bulky particles on the surface of the alloy.

Large chromium carbides formed along the alloy grain boundaries can be seen in Fig. 2 (left-hand side) along with preferential oxidation of carbonitrides (and some carbide) on the right-

hand side. The result of the EDS analysis performed on these carbonitrides (prior to oxidation) is also provided in Fig. 3.

Fig. 2 –SEM photos representing large chromium carbides (Left) & Carbo-nitride of chromium

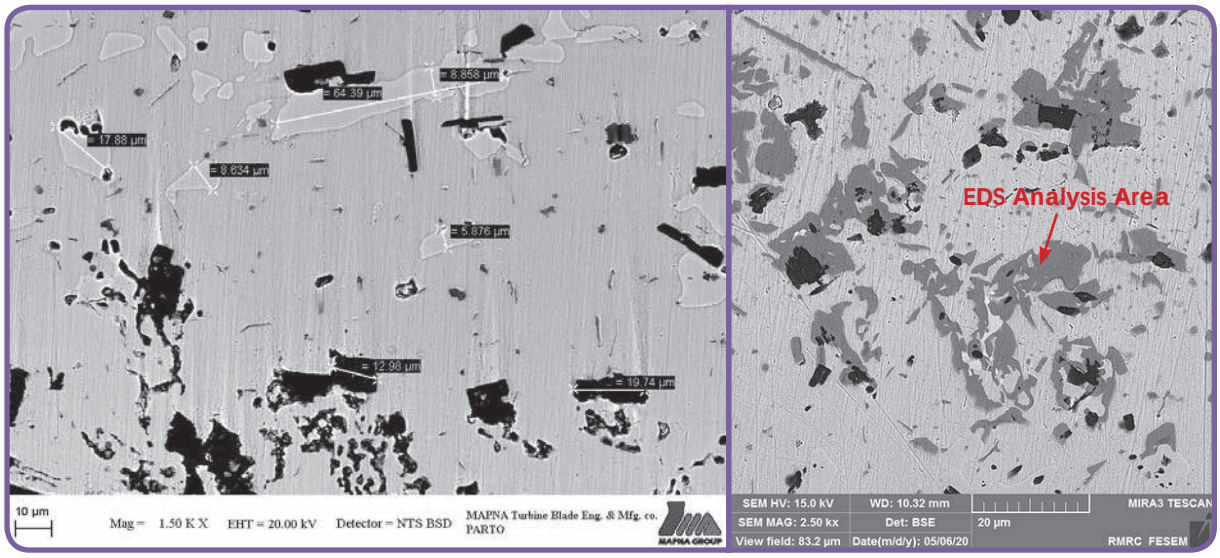

(Right) formed on the inner casing wall after 66k EOH service time

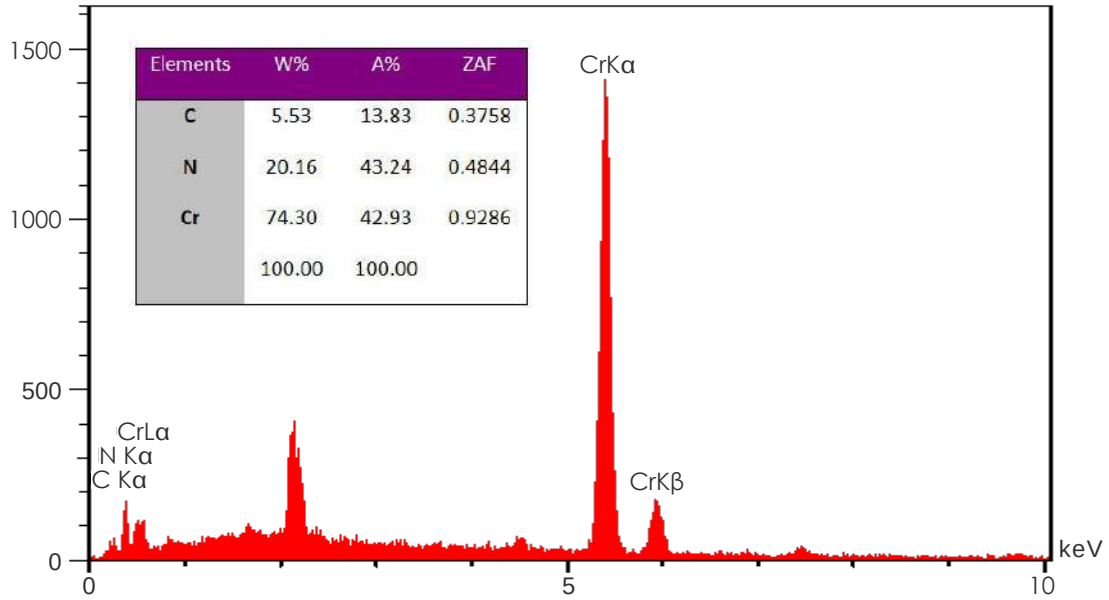

Elements	W%	A%	ZAF
C	5.53	13.83	0.3758
N	20.16	43.24	0.4844
Cr	74.30	42.93	0.9286
	100.00	100.00	

Fig. 3 –EDS analysis results of large carbo-nitrides shown in Fig. 2 (after 66k EOH service time)

Finer oxides of aluminum were found in an area beneath the chromium oxides. A large alloy depletion layer was found below the oxidized layer for the areas kept at temperatures below the gamma prime solid solution temperature (mainly below 850°C) during service. However, the depletion layer disappeared on samples taken from hotter areas of the component operating at temperatures above the gamma prime solid solution temperature of this specific alloy. This mechanism of surface degradation was observed in all samples taken from the combustion

components after 33k, 66k and 100k EOH service life but at different extents. The preferential oxidation of these carbonitrides, internal oxidation and depletion were the dominant damage mechanisms deteriorating the sound metal thickness and reducing the load bearing cross section of the alloy. Kinetics of surface oxidation/nitridation from both gas and air sides of the combustion chamber components were evaluated in this experimental study. The surface damage could reach well up to 10-12% of the alloy cross section after a long service life which could potentially erode around 20-30% of the component's life margin, which is significantly high. This has been considered in the life assessment of the parts under investigation.

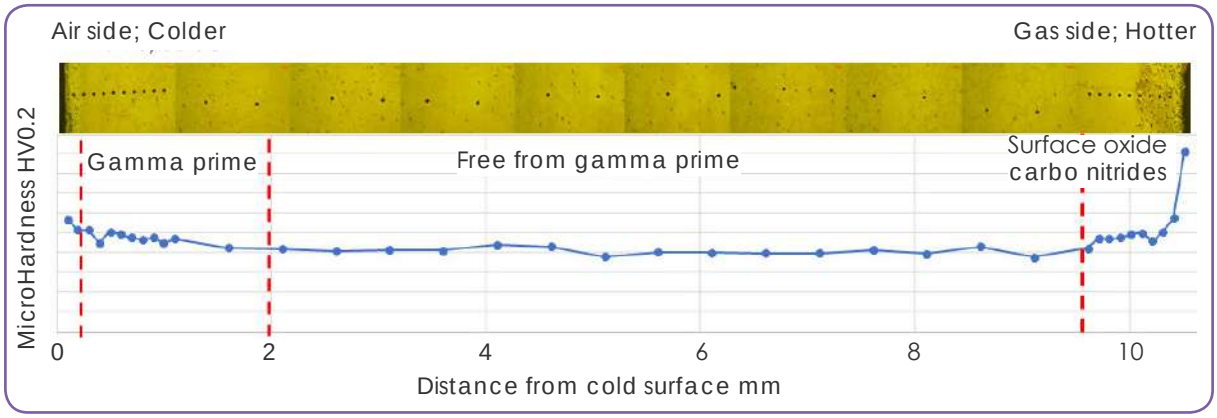

Fig. 4 – Hardness variation graph across the wall of hot gas casing (after 100k EOH service time)

In addition to the above-mentioned surface degradation, the changes of the alloy microstructure had resulted in a large variation in alloy hardness. The alloy hardness had increased from around 180HV to about 300-400HV then reduced back to around 180-200HV across the wall thickness of the combustion component. This was a relatively complex and large variation which had to be well understood in order to assess the remained service life of the components. As an example, the measured hardness of the hot gas casing after 100k EOH is shown in Fig. 4. The hardness was high towards the inner and outer surfaces, with the peak hardness measured toward the gas side. This high hardness reading is related to the potential diffusion of nitrogen into the surface and formation of carbides and carbo-nitrides. Additionally, the bulk hardness had also been reduced (in this case) due to dissolution of the gamma prime, albeit in a narrow band near the outer surface (cold side) which still contained some coarsened gamma prime particles. The presences of these particles had increased the base alloy hardness. With such a large variation in hardness values, it is highly critical that site testing of mixing chambers and inner casing is performed based on detailed background knowledge of the alloy microstructural evolution and hardness with time and temperature. This was one of the key lessons learned in this research project.

Furthermore, the alloy grain boundaries have changed significantly by forming M6C carbides (Mo based carbides) and M23C6 carbides (Cr based carbides), as shown in Fig. 5. The evolution of carbides in grain boundaries had reduced the ductility and impacted the properties of the mixing chamber and inner casing alloys. The size of these carbide particles had grown from less than 0.1μm to several micrometers along the grain boundaries, depending on the exposed time and temperature of the alloy.

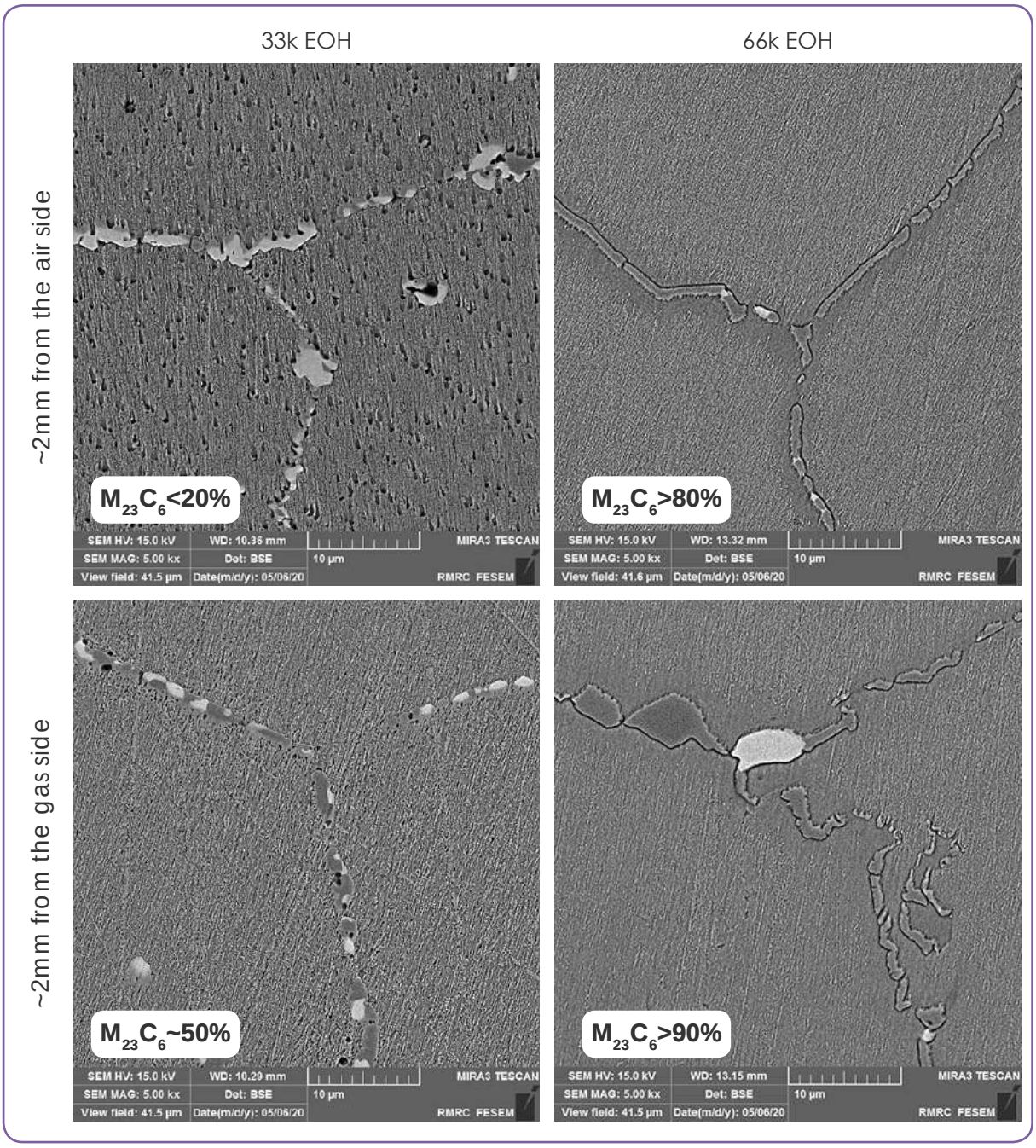

Fig. 5 – Microstructural analyses photos representing grain boundaries precipitation of $M_{23}C_6$ carbides (grey particles) and M_6C carbides (bright particles)

The impact energy of ex-service components in comparison with those of new plates of the same materials is represented in Fig. 6. As shown in Fig. 6, the ductility and impact properties of degraded alloys significantly improved by applying innovative rejuvenation heat treatment cycle developed in the course of this research project.

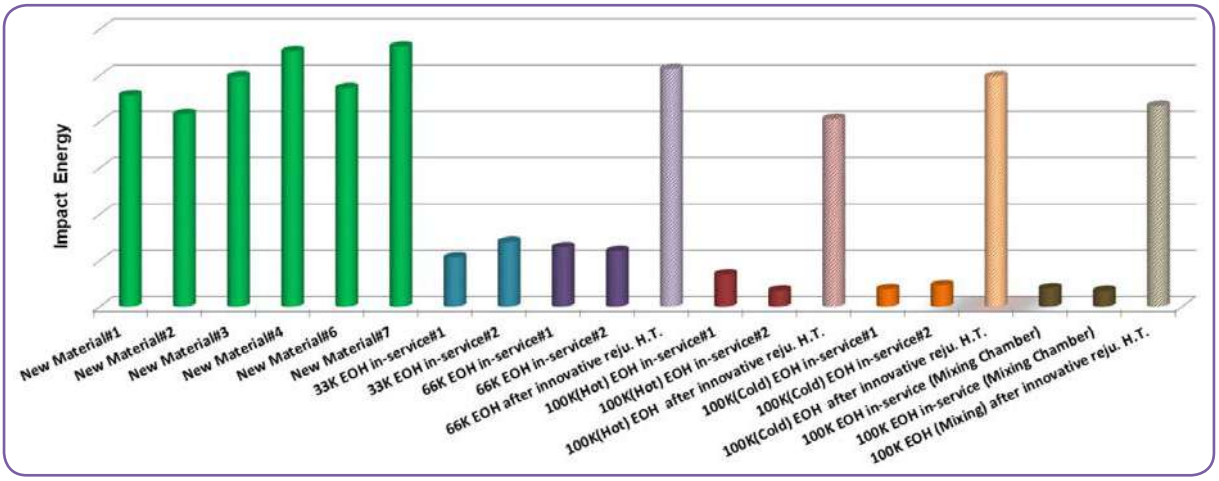

Fig. 6 – Impact properties of different samples taken for this study representing substantial improvement made on service-run combustion components following implementation of rejuvenation heat treatment process

Concluding Remarks

An extensive testing and evaluation study was carried out on a range of service-run mixing chambers and inner casings of MGT-70 gas turbines by MAPNA Turbine over a period of 18 months. The tests were also carried out on a range of as-fabricated IN617 superalloys. The highlights of this study are as follows:

- Surface degradation of the alloy is closely linked to the metal temperature of the part at the vicinity of the hot gas. However, the degradation of the alloy from the cold side of the combustion parts and components cannot be totally disregarded in the life assessment analyses.
- The grain boundary carbide evolution was the main driver for loss of ductility of the alloy. This degradation can largely be recovered by applying a proper heat treatment process.
- The coarsening of the gamma prime particles had contributed to the loss of hardness and tensile properties of the alloy

To assess the condition of an ex-service combustion hardware a full understanding of the alloy surface degradation behavior, microstructural changes and their relationship with the alloy mechanical properties is necessary. The wrought alloy IN617, with a low level of Ti+Al and other refractory elements might seem a very basic super-alloy. However, its structural evolution and surface degradation is highly sensitive to small changes in the metal temperature of the alloy during exposure to high temperatures which should be predicted for the life assessment. This study has provided new insights and methodologies for life assessment and extension of two highly critical hot gas path components of MGT-70 gas turbines; the mixing chamber and hot gas inner casing.

References

[1] Wu, Q., Song, H., Swindeman, R.W. et al. "Microstructure of Long-Term Aged IN617 Ni-Base Superalloy", Metallurgical and Materials Transactions A, Vol. 39, 2569-85 (2008)

[2] Mankins, W.L., Hosier, J.C. &Bassford, T.H. "Microstructure and phase stability of INCONEL alloy 617", Metallurgical Transactions, Vol. 5, 2579-90 (1974)

[3] Yan GUO, Bohan WANG and Shufang HOU. "Aging Precipitation Behavior and Mechanical Properties of Inconel 617 Superalloy", Acta Metall. Sin. (Engl. Lett.), Vol.26, No.3, 307-12 (2013)

Head Office:
231 Mirdamad Ave. Tehran, I.R.Iran.
P.O.Box: 15875-5643
Tel: +98 (21) 22908581
Fax: +98 (21) 22908654

Factory:
Mapna blvd., Fardis, Karaj, I.R.Iran.
Post code: 31676-43594
Tel: +98 (26) 36630010
Fax: +98 (26) 36612734

www.mapnaturbine.com
tr@mapnaturbine.com

GR433-0